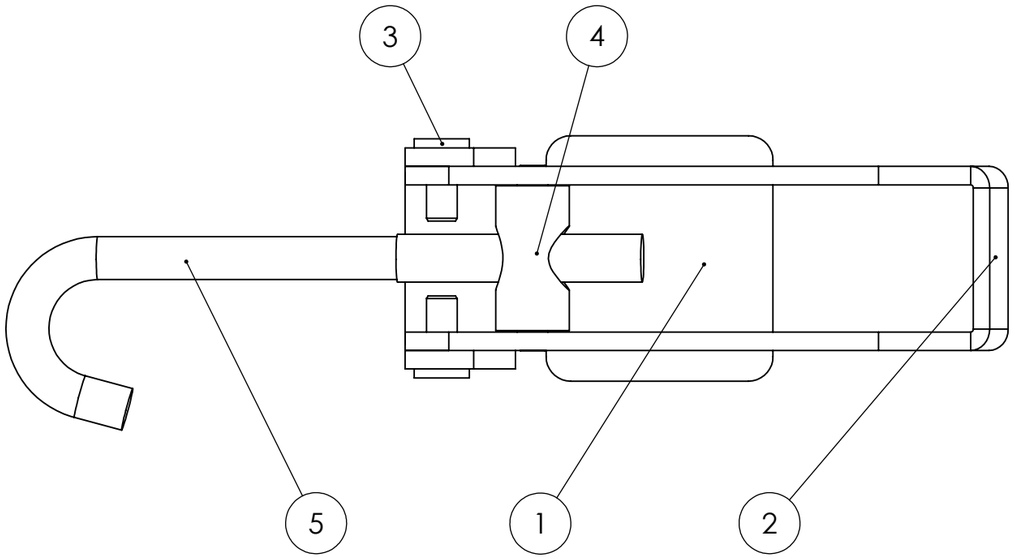

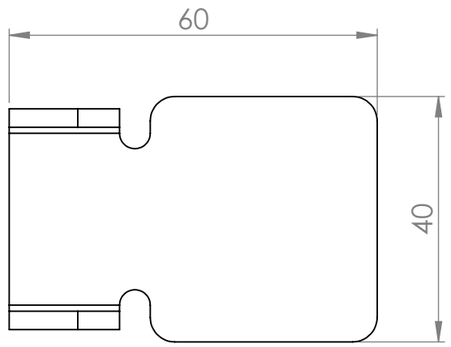

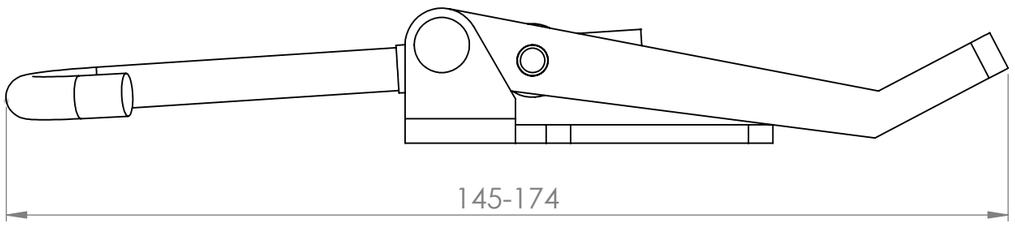

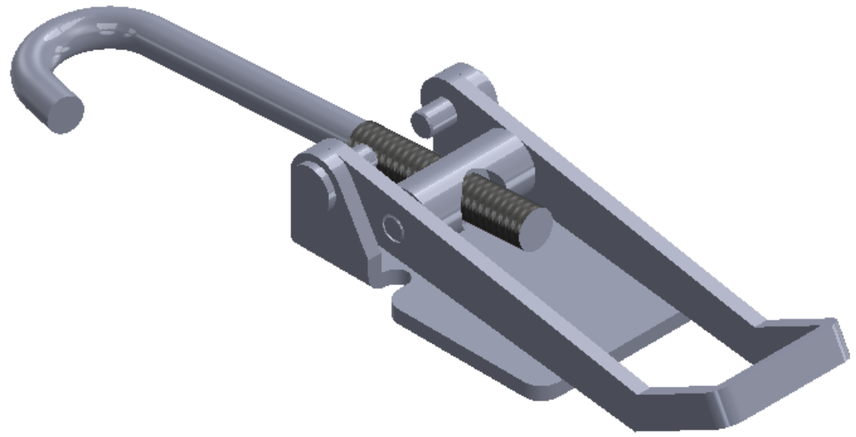

ITEM NO.	PART NUMBER	QTY.
1	703 - Baseplate A	1
2	703 - Bracket	1
3	704 - Rivet	2
4	703 - Mid cylinder	1
5	703 - Hook screw	1

OJOP SWEDEN	FINISH: Electropolished		DEBURR AND BREAK SHARP EDGES	DO NOT SCALE DRAWING	REVISION 01
				OJOP Sweden AB	
	NAME	SIGNATURE	DATE	TITLE: 543002 - H A Stainless	
DRAWN	RR		17/5 - 17		
CHK'D	PR		20/9 - 17		
APPV'D	XXXX		XXXX		
MFG	XXXX		XXXX		
Q.A	XXXX		XXXX	MATERIAL: SS2343	DWG NO. 543002 - H A Stainless A3
				WEIGHT: 0,171 KG	SCALE:1:1 SHEET 1 OF 1