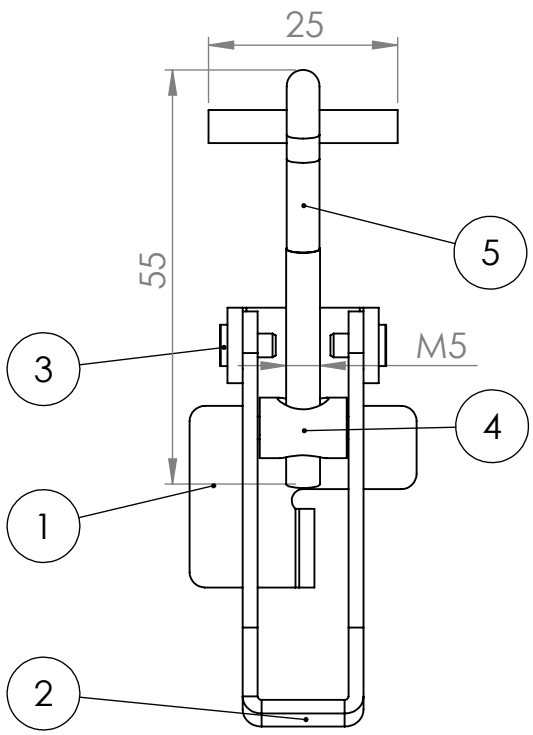

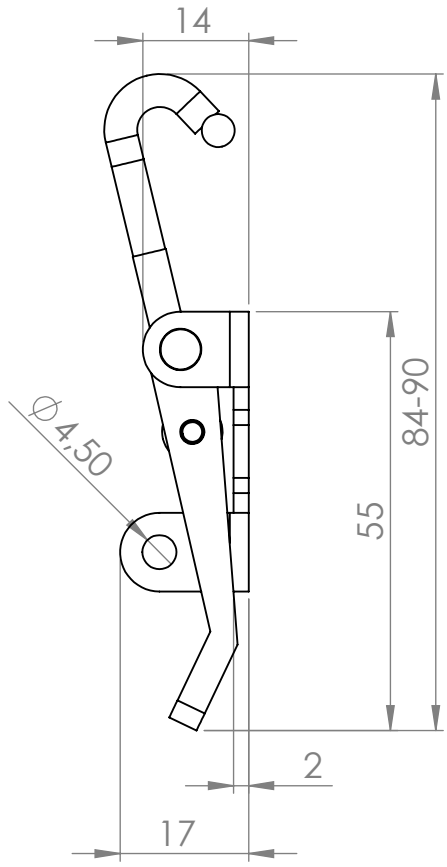

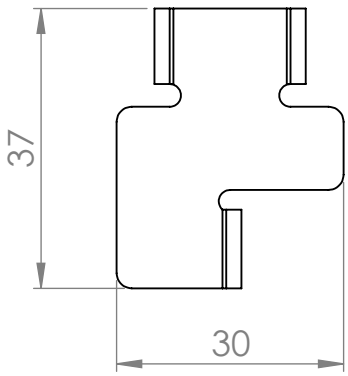

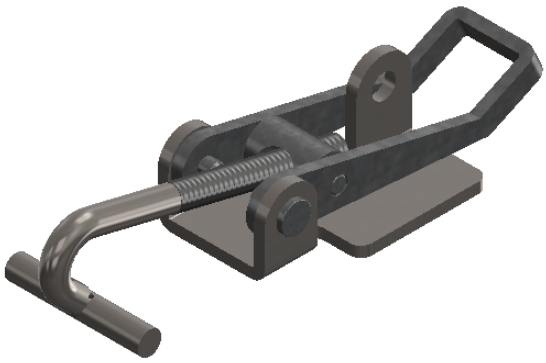

ITEM NO.	PART NUMBER	DESCRIPTION	QTY.
1	74610	Baseplate 701 L/A SS	1
2	74101	Bracket 701 SS	1
3	64001	Rivet 701 SS	2
4	74190	Mid cylinder 701 SS	1
5	74063	Bent T-screw 701 SS	1

FINISH: Electropolished

DEBURR AND BREAK SHARP EDGES

REVISION

OJOP Sweden AB

	NAME	SIGNATURE	DATE
DRAWN	RR		9/5 - 17
CHK'D	PR		19/9 - 17
APPV'D	XXXX		XXXX
MFG	XXXX		XXXX
Q.A	XXXX		XXXX

TITLE:

540301 - 701 BT LA Stainless

MATERIAL: SS2343

WEIGHT: 0,043 KG

DWG NO. 540301 - 701 BT LA Stainless

A4

SCALE:1:1

SHEET 1 OF 1