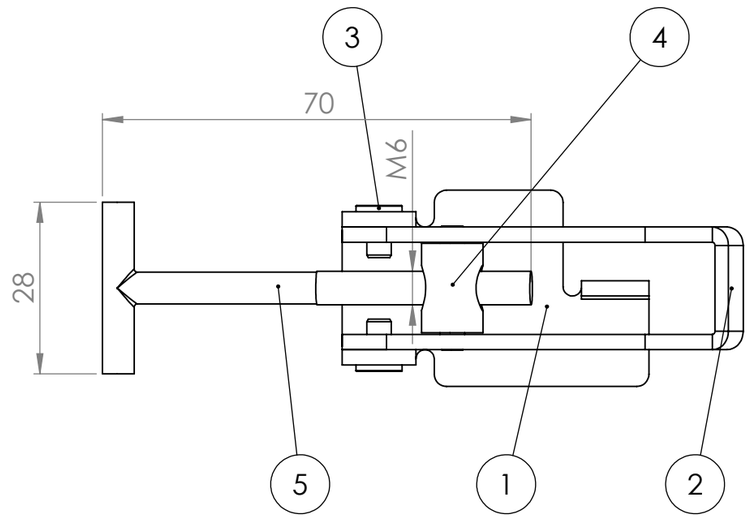

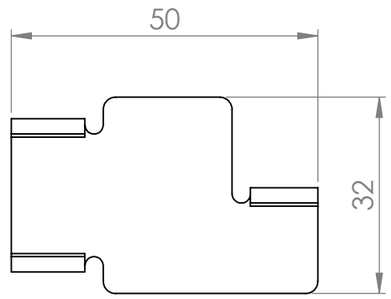

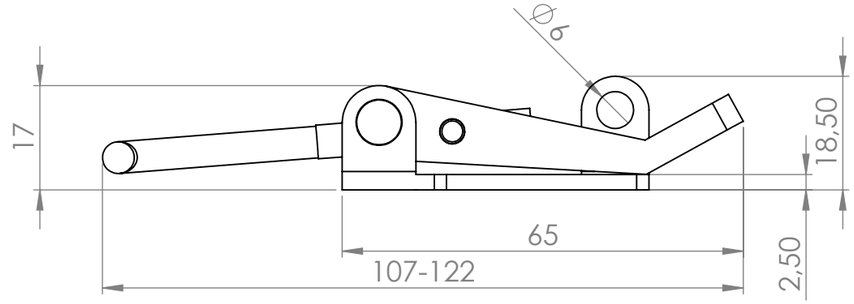

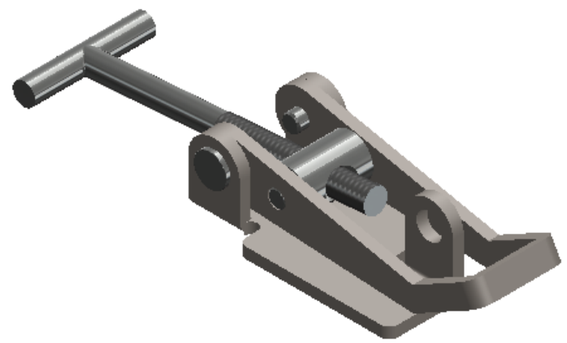

ITEM NO.	PART NUMBER	DESCRIPTION	QTY.
1	72840	Baseplate 702 L/C	1
2	72111	Bracket 702	1
3	62011	Rivet 702 ZP	2
4	620601	Mid cylinder 702 ZP	1
5	720981	T-screw 702 ZP	1

OJOP SWEDEN	FINISH: UNTREATED		DEBURR AND BREAK SHARP EDGES	DO NOT SCALE DRAWING	REVISION 01
				OJOP Sweden AB	
	NAME	SIGNATURE	DATE	TITLE: 520403 - 702 T LA	
DRAWN	RR		10/5 - 17		
CHK'D	PR		12/9 - 17		
APPV'D	XXXX		XXXX		
MFG	XXXX		XXXX		
Q.A	XXXX		XXXX	MATERIAL: DC01	DWG NO. 520403 - 702 T LA A3
				WEIGHT: 0,074 KG	SCALE:1:1 SHEET 1 OF 1